Cambridge Assessment International Education

Cambridge International AS & A Level

PHYSICS **9702/13**

Paper 1 Multiple Choice **October/November 2024**

1 hour 15 minutes

You must answer on the multiple choice answer sheet.

You will need: Multiple choice answer sheet
Soft clean eraser
Soft pencil (type B or HB is recommended)

INSTRUCTIONS

- There are **forty** questions on this paper. Answer **all** questions.
- For each question there are four possible answers **A**, **B**, **C** and **D**. Choose the **one** you consider correct and record your choice in soft pencil on the multiple choice answer sheet.
- Follow the instructions on the multiple choice answer sheet.
- Write in soft pencil.
- Write your name, centre number and candidate number on the multiple choice answer sheet in the spaces provided unless this has been done for you.
- Do **not** use correction fluid.
- Do **not** write on any bar codes.
- You may use a calculator.

INFORMATION

- The total mark for this paper is 40.
- Each correct answer will score one mark.
- Any rough working should be done on this question paper.

IB24 11_9702_13/3RP
© UCLES 2024

Data

acceleration of free fall	$g = 9.81\,\text{m s}^{-2}$
speed of light in free space	$c = 3.00 \times 10^{8}\,\text{m s}^{-1}$
elementary charge	$e = 1.60 \times 10^{-19}\,\text{C}$
unified atomic mass unit	$1\,\text{u} = 1.66 \times 10^{-27}\,\text{kg}$
rest mass of proton	$m_\text{p} = 1.67 \times 10^{-27}\,\text{kg}$
rest mass of electron	$m_\text{e} = 9.11 \times 10^{-31}\,\text{kg}$
Avogadro constant	$N_\text{A} = 6.02 \times 10^{23}\,\text{mol}^{-1}$
molar gas constant	$R = 8.31\,\text{J K}^{-1}\,\text{mol}^{-1}$
Boltzmann constant	$k = 1.38 \times 10^{-23}\,\text{J K}^{-1}$
gravitational constant	$G = 6.67 \times 10^{-11}\,\text{N m}^2\,\text{kg}^{-2}$
permittivity of free space	$\varepsilon_0 = 8.85 \times 10^{-12}\,\text{F m}^{-1}$ $\left(\frac{1}{4\pi\varepsilon_0} = 8.99 \times 10^{9}\,\text{m F}^{-1}\right)$
Planck constant	$h = 6.63 \times 10^{-34}\,\text{J s}$
Stefan–Boltzmann constant	$\sigma = 5.67 \times 10^{-8}\,\text{W m}^{-2}\,\text{K}^{-4}$

Formulae

uniformly accelerated motion	$s = ut + \frac{1}{2}at^2$ $v^2 = u^2 + 2as$
hydrostatic pressure	$\Delta p = \rho g \Delta h$
upthrust	$F = \rho g V$
Doppler effect for sound waves	$f_\text{o} = \frac{f_\text{s} v}{v \pm v_\text{s}}$
electric current	$I = Anvq$
resistors in series	$R = R_1 + R_2 + \ldots$
resistors in parallel	$\frac{1}{R} = \frac{1}{R_1} + \frac{1}{R_2} + \ldots$

© UCLES 2024

1 Which statement about physical quantities is correct?

A A physical quantity does **not** always have a magnitude or a unit.

B A physical quantity must always have a magnitude but does **not** always have a unit.

C A physical quantity must always have a unit but does **not** always have a magnitude.

D A physical quantity must always have a magnitude and a unit.

2 What is a reasonable estimate of the mass of a solid sphere of copper that has a diameter of 60 cm?

A 0.1 kg **B** 10 kg **C** 1000 kg **D** 100 000 kg

3 The power output P of a star can be modelled with the equation

$$P = \sigma A T^4$$

where σ is a constant, A is the surface area of the star and T is the surface temperature of the star.

What are the SI base units of σ?

A $\text{kg s}^{-2}\text{ K}^{-4}$

B $\text{kg s}^{-3}\text{ K}^{-4}$

C $\text{kg m}^{-1}\text{ s}^{-2}\text{ K}^{-4}$

D $\text{kg m}^{-1}\text{ s}^{-3}\text{ K}^{-4}$

4 A boy throws a stone with a horizontal velocity of 10 m s^{-1} from the top of a building. The height of the building is 8.0 m. The stone travels along a curved path until it hits the horizontal ground, as shown.

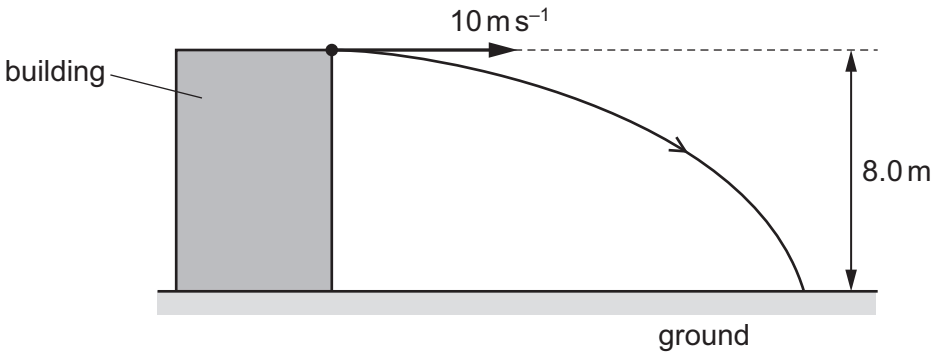

Air resistance is negligible.

How long does it take the stone to reach the ground?

A 0.61 s **B** 0.80 s **C** 1.3 s **D** 1.6 s

5 Four cuboids with identical lengths, breadths and heights are immersed in water. The cuboids are held at the same depth and in identical orientations by vertical rods, as shown.

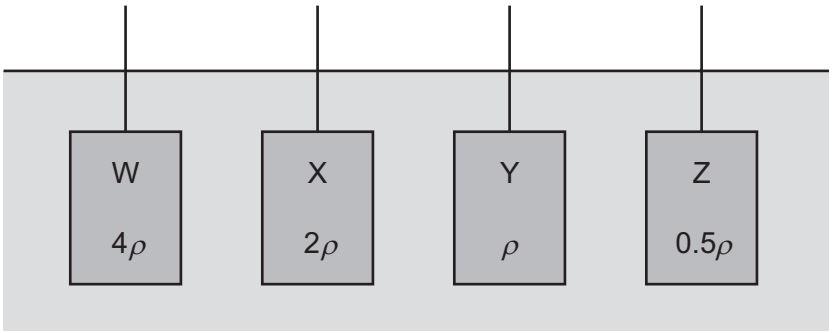

Water has density ρ.
Cuboid W is made of material of density 4ρ.
Cuboid X is made of material of density 2ρ.
Cuboid Y is made of material of density ρ.
Cuboid Z is made of material of density 0.5ρ.

Which statement is correct?

A The upthrust of the water on each of the cuboids is the same.

B The upthrust of the water on W is twice the upthrust of the water on X.

C The upthrust of the water on X is twice the upthrust of the water on W.

D The upthrust of the water on Y is zero.

6 In which example is it **not** possible for the underlined object to be in equilibrium?

A An aeroplane climbs at a steady rate.

B An aeroplane tows a glider at a constant altitude.

C A speedboat changes direction at a constant speed.

D Two boats tow a ship into harbour.

7 Two identical balls are projected vertically upwards from ground level with the same initial velocity. Ball X is in a vacuum and ball Y is in air.

Which statement about the motion of the balls is correct?

A Ball X reaches a greater maximum height and in a longer time than ball Y.

B Ball X reaches a greater maximum height and in a shorter time than ball Y.

C Ball Y reaches a greater maximum height and in a longer time than ball X.

D Ball Y reaches a greater maximum height and in a shorter time than ball X.

© UCLES 2024

8 The graph shows the variation of velocity with time for a stone that falls from a bridge into a lake and sinks to the bottom of the lake.

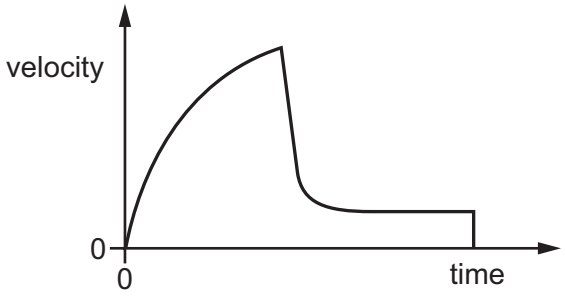

What can be deduced about the motion of the stone?

A Terminal velocity was reached in air.

B The acceleration in air was decreasing with increasing time.

C The distance travelled in water was greater than the distance travelled in air.

D The rate of change of velocity in air was constant.

9 The graph shows the variation of the momentum p with time t for a car.

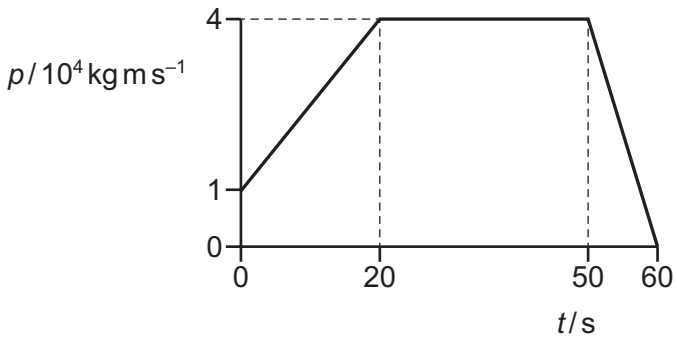

What is the resultant force on the car at $t = 10\,\text{s}$?

A 0 **B** 1500 N **C** 2000 N **D** 4000 N

10 Two objects X and Y form an isolated system. X and Y collide and then separate. The mass of X is greater than the mass of Y.

Which statement about the collision is correct?

A The change of momentum of Y is greater than the change of momentum of X.

B The force on Y is greater than the force on X.

C The forces that X and Y exert on each other act for the same length of time.

D The forces that X and Y exert on each other are gravitational forces only.

© UCLES 2024

11 Which row states whether total momentum and total kinetic energy are conserved in an inelastic collision in which there are no external forces?

	total momentum	total kinetic energy
A	conserved	conserved
B	conserved	not conserved
C	not conserved	conserved
D	not conserved	not conserved

12 A tennis ball is thrown vertically upwards. The tennis ball reaches its highest point and then falls back down to the point from which it was thrown.

Air resistance is significant.

At which position on the path of the tennis ball is the resultant force on the tennis ball greatest?

A at the start just after the tennis ball is released

B when the tennis ball is halfway to its highest point on the way up

C when the tennis ball is at its highest point

D when the tennis ball is halfway from its highest point on the way down

13 Which statement correctly describes a couple?

A A couple is a pair of forces that act in the same direction.

B A couple is a pair of forces that act on the centre of gravity of an object.

C A couple is a pair of forces that act to produce a resultant force.

D A couple is a pair of forces that act to produce rotation only.

14 A uniform beam of mass 1.4 kg is pivoted at P, as shown. The beam has a length of 0.60 m and P is a distance of 0.20 m from one end. Loads of 3.0 kg and 6.0 kg are suspended at distances of 0.35 m and 0.15 m from the pivot, as shown.

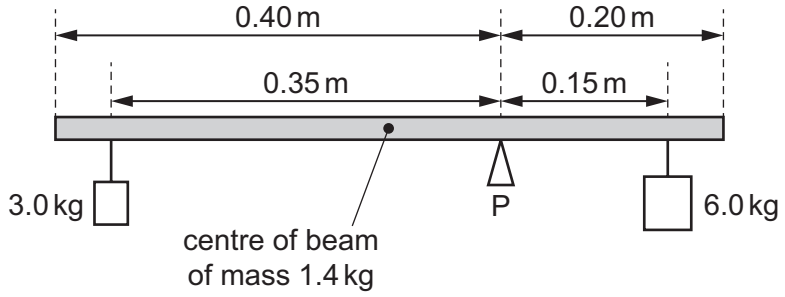

What is the torque that must be applied to the beam in order to maintain it in equilibrium?

A 0.010 N m **B** 0.10 N m **C** 0.29 N m **D** 2.8 N m

15 The diagrams show three rigid objects P, Q and R being subjected to different combinations of forces.

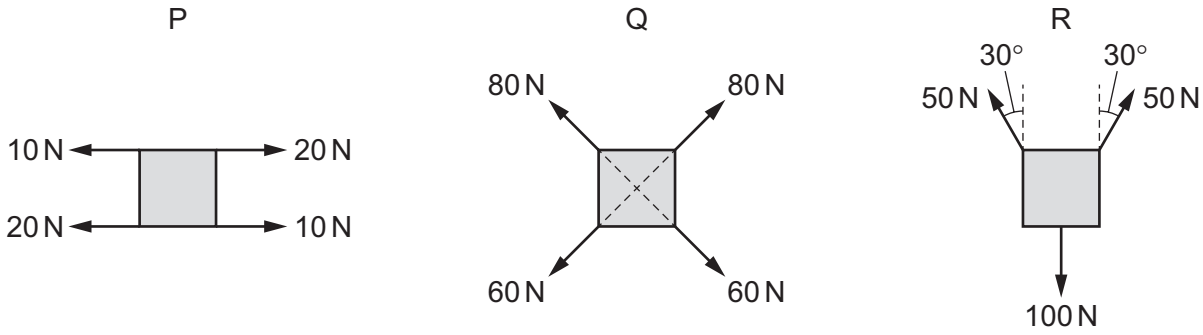

Which objects are in equilibrium?

A P and Q

B P and R

C Q and R

D none of them

16 The diagram shows two liquids, labelled P and Q, that do **not** mix. The liquids are in equilibrium in an open U-tube. Three equal distances *x* are labelled.

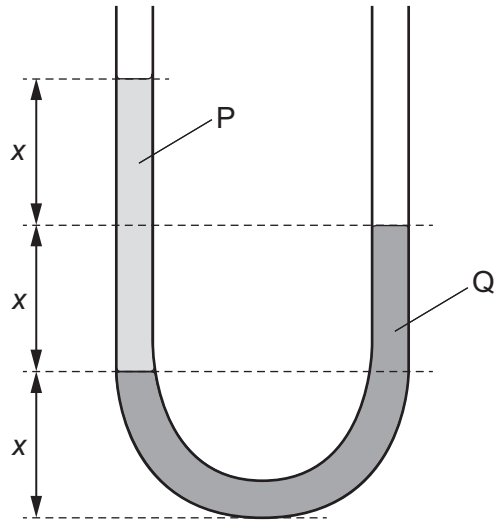

What is the ratio $\frac{\text{density of P}}{\text{density of Q}}$?

A $\frac{1}{2}$ **B** $\frac{2}{3}$ **C** $\frac{3}{2}$ **D** 2

17 A stone of mass 0.30 kg is thrown vertically downwards with a speed of 20 m s^{-1} from a height of 12 m above the ground. It falls vertically until it hits the ground. Air resistance is negligible.

What is the kinetic energy of the stone just before it hits the ground?

A 25 J **B** 35 J **C** 60 J **D** 95 J

18 A student can run or walk up the stairs to her classroom.

Which statement describes the power required and the gravitational potential energy gained while running up the stairs compared to walking up them?

A Running provides more gravitational potential energy and uses more power.

B Running provides more gravitational potential energy and uses the same power.

C Running provides the same gravitational potential energy and uses more power.

D Running provides the same gravitational potential energy and uses the same power.

19 A weight *W* hangs from a trolley that runs along a rail. The trolley moves horizontally through a distance *p* and simultaneously raises the weight through a height *q*.

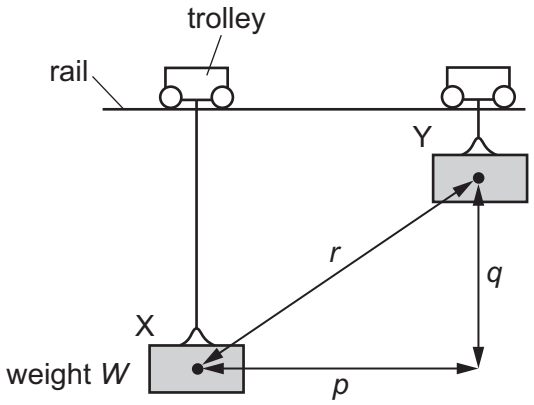

As a result, the weight moves through a distance *r* from X to Y. It starts and finishes at rest.

How much work is done on the weight during this process?

A Wp **B** $W(p + q)$ **C** Wq **D** Wr

20 The equation for kinetic energy E_K can be derived using the equations of motion.

Four equations relating to motion are listed.

1 $W = Fs$

2 $F = ma$

3 $v^2 = u^2 + 2as$

4 $P = \frac{W}{t}$

Which three equations can be used to derive the equation for E_K?

A 1, 2 and 3 **B** 1, 2 and 4 **C** 1, 3 and 4 **D** 2, 3 and 4

© UCLES 2024

21 The force–extension graph of a metal wire is shown.

At which point on the graph does the metal wire stop obeying Hooke's law?

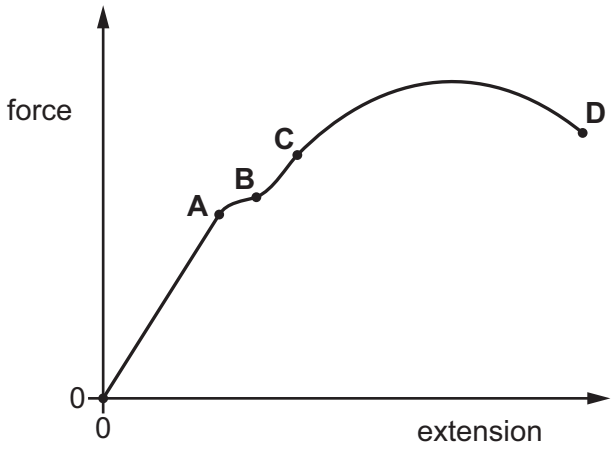

22 A uniform wire is made of a metal that has a Young modulus of 1.3×10^{11} Pa.

The wire is 2.4 m long and has a spring constant of 2.7×10^{4} N m^{-1}.

What is the volume of the wire?

A 2.6×10^{-8} m^3 **B** 6.3×10^{-8} m^3 **C** 5.0×10^{-7} m^3 **D** 1.2×10^{-6} m^3

23 A rubber cord hangs from a rigid support. A weight attached to its lower end is gradually increased from zero, and then gradually reduced to zero.

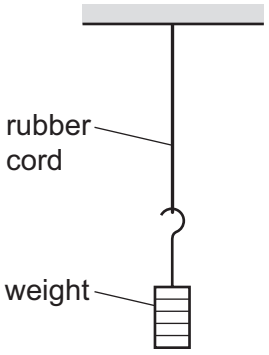

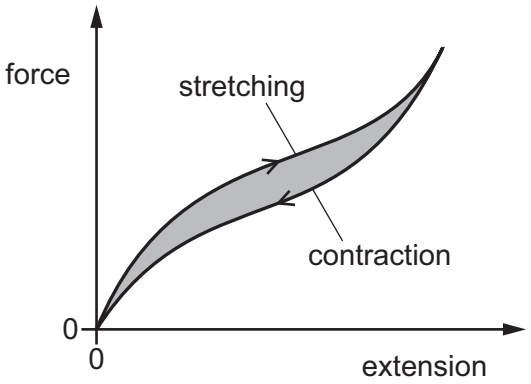

The force–extension curve for contraction is below the force–extension curve for stretching.

What does the shaded area between the curves represent?

A the elastic potential energy stored in the rubber cord

B the thermal energy dissipated in the rubber cord

C the work done by the rubber cord during contraction

D the work done on the rubber cord during stretching

24 A source of sound waves of constant frequency is travelling as shown.

In which situation would the stationary observer detect a sound with the lowest frequency?

A



B



C

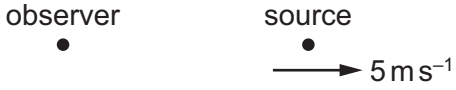

D

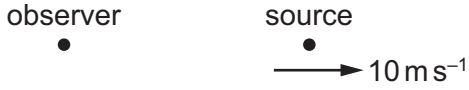

25 Each of the principal radiations of the electromagnetic spectrum has a range of wavelengths.

Which wavelength is correctly linked to its radiation?

	wavelength / m	radiation
A	10^{-9}	gamma ray
B	10^{-5}	microwave
C	10^{-8}	ultraviolet
D	10^{-14}	X-ray

26 A transverse water wave has a frequency of 15 Hz, a wavelength of 0.12 m and an amplitude of 4.0 mm.

P is a water particle that is initially at the peak of the wave, as shown.

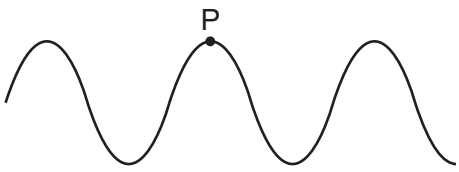

What is the total vertical distance travelled by P in a time of 0.5 s?

A 30 mm **B** 60 mm **C** 120 mm **D** 900 mm

© UCLES 2024

27 A wave is formed on a string.

A student plots a graph of the variation of displacement *d* with time *t* for a point on the string.

The student marks two points, X and Y, on the graph.

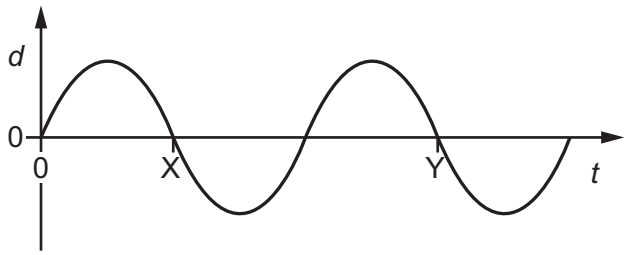

Which property of the wave is represented by the distance along the horizontal axis between X and Y?

A amplitude

B frequency

C period

D wavelength

28 A stationary wave is set up in a stretched string.

Which distance is equal to the wavelength of the wave?

A double the distance between adjacent antinodes

B half the distance between adjacent nodes

C the distance between adjacent antinodes

D the distance between a node and an adjacent antinode

© UCLES 2024

29 A source of coherent light is incident on two slits, P and Q, which are placed 80 mm apart. The light has a single frequency of 1.5×10^{12} Hz. The light from the slits meets on a screen that is a distance of 4.0 m from the slits. The screen is parallel to a line joining the slits.

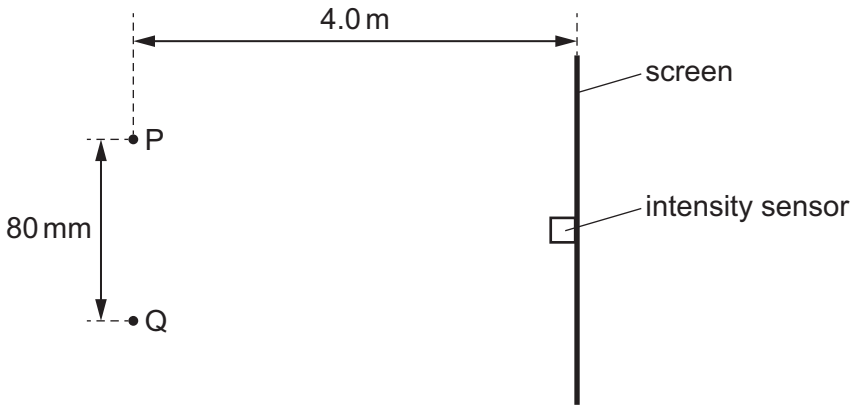

not to scale

An intensity sensor is placed on the screen at the midpoint of the interference pattern such that the intensity reading is a maximum. The intensity sensor is moved along the screen.

The sensor travels through two intensity minima, two intensity maxima and stops in the middle of the third intensity minimum.

Which distance does the sensor move through?

A 4.0 mm **B** 10 mm **C** 25 mm **D** 50 mm

30 A vibrating bar produces surface water waves in a ripple tank.

The wavelength of the waves is 5.0 cm and they pass through a gap of width 20 cm.

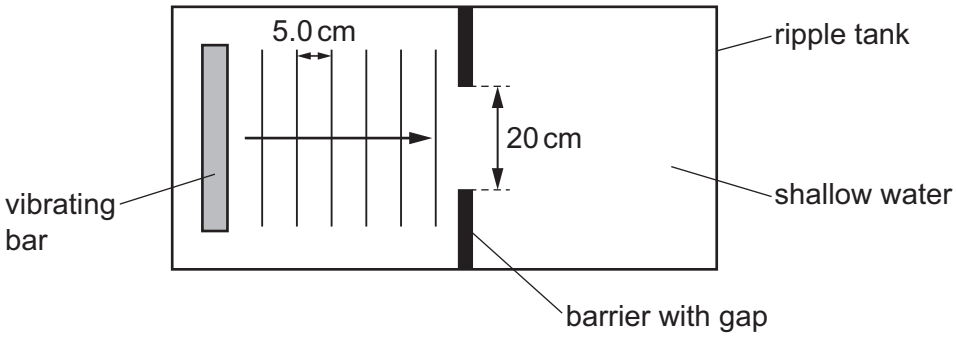

Which change will increase the amount of diffraction that is observed?

A decreasing the distance between the bar and the gap

B decreasing the frequency of the wave

C increasing the amplitude of the wave

D increasing the width of the gap

© UCLES 2024

31 What is an electric current?

A a flow of charge carriers

B a flow of energy

C an electron

D the charge on a particle

32 A wire of diameter d is connected into an electric circuit. There is a current I in the wire and the charge carriers have an average drift speed v.

The wire is replaced with a new wire of the same material but with a diameter $0.5d$.

The current is adjusted so that the charge carriers in the new wire have an average drift speed $3v$.

What is the current in the new wire?

A $0.75I$ **B** $1.5I$ **C** $6I$ **D** $12I$

33 A fixed resistor and a diode are combined by connecting them in series. The total potential difference V across the combination is varied and the corresponding current I is measured.

Which graph could represent the variation of I with V?

A

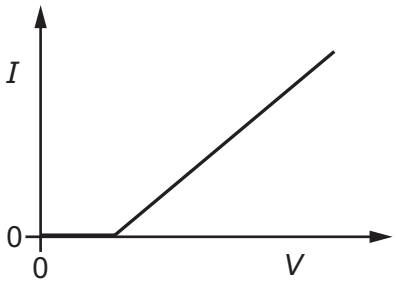

B

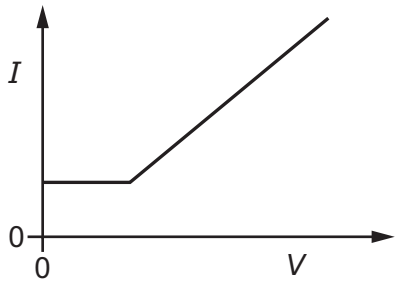

C

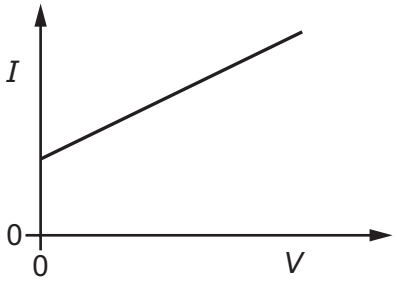

D

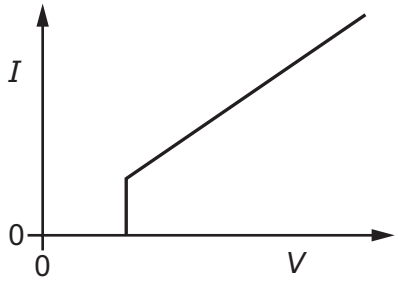

34 The potential difference (p.d.) across a fixed resistor is V. The power dissipated in the resistor is 5.0 W.

The p.d. across the resistor then changes to a new value. With the new p.d. the energy transferred to the resistor in a time of 2.25 s is 45.0 J.

What is the new p.d. across the resistor?

A $\frac{1}{2}V$ **B** $2V$ **C** $3V$ **D** $4V$

35 The diagram shows part of a circuit that uses a potentiometer wire to measure a potential difference (p.d.) in an external circuit.

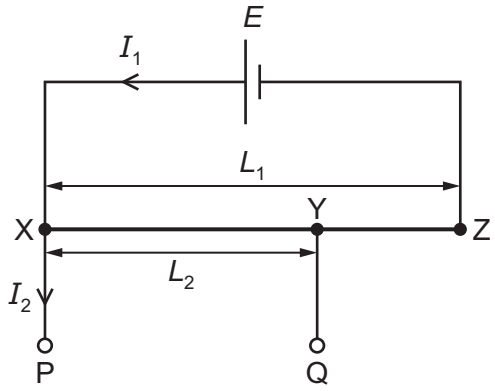

The potentiometer wire XZ has length L_1. It is connected to a cell of known electromotive force (e.m.f.) E that has negligible internal resistance.

Terminals P and Q are connected to the external p.d. to be measured. The length of the potentiometer wire between points X and Y is L_2.

The ratio of the lengths L_1 and L_2 is used to determine the p.d. between P and Q in terms of E.

Which condition must be met in order to determine this p.d.?

A The current I_1 must be zero.

B The current I_2 must be zero.

C The p.d. across YZ must be zero.

D The resistance of the external circuit must be zero.

© UCLES 2024

36 The diagram shows a circuit.

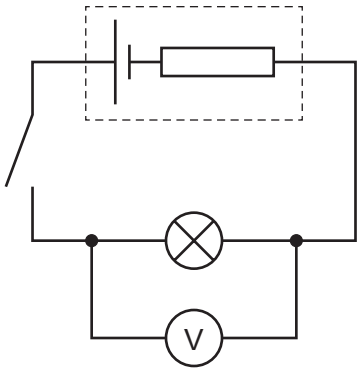

Which statement about the circuit is **not** correct?

A Electromotive force is the energy transferred per unit charge.

B Energy is transferred from chemical potential energy in the cell to other forms when the switch is closed.

C The electromotive force of the cell is greater than the terminal potential difference when the switch is closed.

D When the switch is open, the voltmeter measures the electromotive force of the cell.

37 A circuit contains a battery of electromotive force E and internal resistance r connected to two resistors each of resistance $2.5\,\Omega$.

The resistors are connected in parallel as shown.

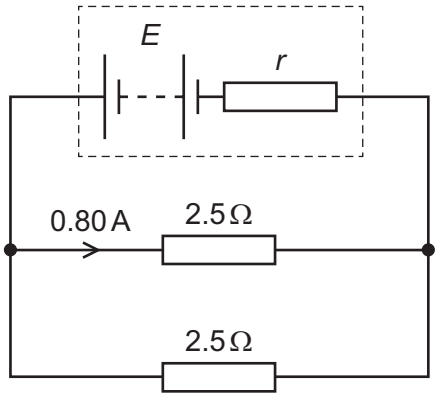

The current in one of the resistors is 0.80 A.

Which expression, where E is in volts and r is in ohms, gives the internal resistance r?

A $\frac{E - 4.0}{1.6}$ **B** $\frac{E - 4.0}{0.80}$ **C** $\frac{E - 2.0}{1.6}$ **D** $\frac{E - 2.0}{0.80}$

© UCLES 2024

38 What is the rest mass of a beta-particle?

A 0

B 9.11×10^{-31} kg

C 1.66×10^{-27} kg

D 1.67×10^{-27} kg

39 What is the name of the group (class) of particles containing mesons, and the name of the group (class) of particles containing baryons?

	group (class) of particles containing mesons	group (class) of particles containing baryons
A	hadrons	hadrons
B	hadrons	leptons
C	leptons	hadrons
D	leptons	leptons

40 A magnesium nucleus $^{23}_{12}\text{Mg}$ decays by emitting two particles.

The resulting nucleus is sodium $^{23}_{11}\text{Na}$.

Which two particles are emitted?

A α-particle, antineutrino

B β^+ particle, antineutrino

C β^- particle, neutrino

D β^+ particle, neutrino

Permission to reproduce items where third-party owned material protected by copyright is included has been sought and cleared where possible. Every reasonable effort has been made by the publisher (UCLES) to trace copyright holders, but if any items requiring clearance have unwittingly been included, the publisher will be pleased to make amends at the earliest possible opportunity.

To avoid the issue of disclosure of answer-related information to candidates, all copyright acknowledgements are reproduced online in the Cambridge Assessment International Education Copyright Acknowledgements Booklet. This is produced for each series of examinations and is freely available to download at www.cambridgeinternational.org after the live examination series.

Cambridge Assessment International Education is part of Cambridge Assessment. Cambridge Assessment is the brand name of the University of Cambridge Local Examinations Syndicate (UCLES), which is a department of the University of Cambridge.

© UCLES 2024